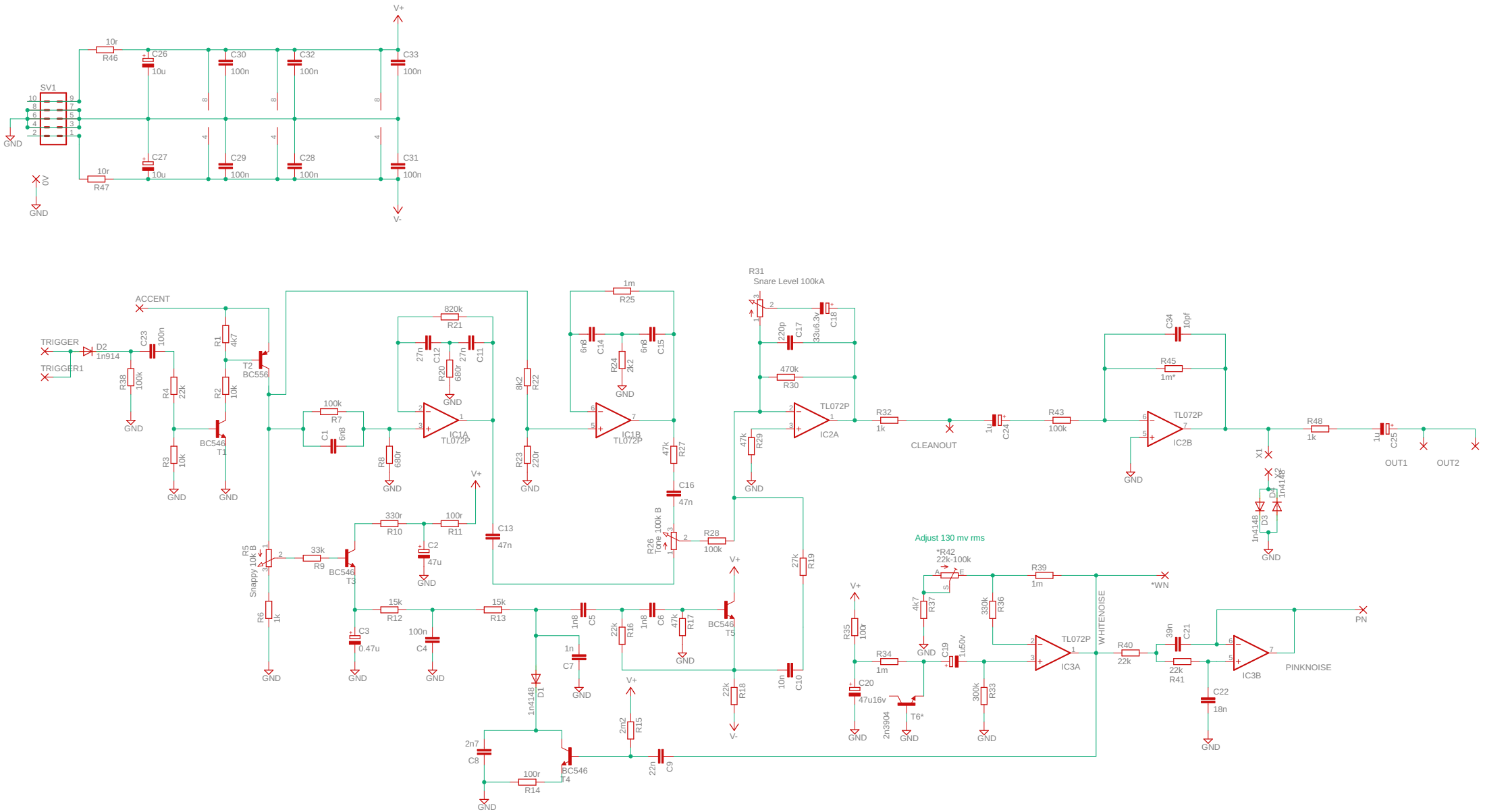
V+
V-
SV1
GND
0V
R46 10r
R47 10r
C26 10u
C27 10u
C30 100n
C29 100n
C32 100n
C28 100n
C33 100n
C31 100n
ACCENT
TRIGGER
TRIGGER1
D2 1n914
C23 100n
R38 100k
R4 22k
R1 4k7
R2 10k
R3 10k
T2 BC556
BC546 T1
R7 100k
C1 6n8
R8 680r
R21 820k
C12 27n
C11 27n
R20 680r
IC1A TL072P
R22 8k2
R23 220r
R25 1m
C14 6n8
C15 6n8
R24 2k2
IC1B TL072P
R31 Snare Level 100kA
C17 220p
C18 33u6.3v
R30 470k
R29 47k
IC2A TL072P
R32 1k
CLEANOUT
C24 1u
R43 100k
C34 10pf
R45 1m*
IC2B TL072P
R48 1k
C25 1u
OUT1
OUT2
X1
X2
D4 1n4148
D3 1n4148
R27 47k
C16 47n
R26 Tone 100k B
R28 100k
R19 27k
C10 10n
R18 22k
R5 Snappy 10k B
R6 1k
R9 33k
BC546 T3
R10 330r
R11 100r
C2 47u
C13 47n
R12 15k
R13 15k
C3 0.47u
C4 100n
C5 1n8
C6 1n8
C7 1n
R16 22k
R17 47k
BC546 T5
D1 1n4148
C8 2n7
R14 100r
BC546 T4
R15 2m2
C9 22n
Adjust 130 mv rms
*R42 22k-100k
R39 1m
*WN
WHITENOISE
R35 100r
R34 1m
C20 47u16v
2n3904 T6*
4k7 R37
330k R36
C19 1u50v
IC3A TL072P
300k R33
R40 22k
39n C21
22k R41
C22 18n
IC3B
PINKNOISE
PN